Intelligent Control Panel

Sielox 2700

Built upon the Sielox access control innovation legacy of more than 45 years, the 2700 is an intelligent, fully distributed controller ensuring decisions even if communications have been interrupted. Incorporating a secure embedded Linux OS with real-time operations, the 2700 Controller provides the ultimate in speed, performance and reliability for long term investment protection.

The 2700 two-door platform continues the one controller for any application foundation using IP communication, controls up to 34 doors (2 hardwired / 32 wireless) and is expandable up to 60 Inputs / Outputs.

Features include OSDP compatibility, firmware updates pushed from Main Controller to downstream Terminal Controllers, variable input power of 12-24 VDC, auto-sensing 12 VDC Aux Power output (1A max), adjustable reader sensitivity to accommodate operation in noisy electrical environments and a reader local buzzer for held open or forced conditions. The intuitive web interface is designed for efficient configuration, diagnostics, and troubleshooting.

The 2700 is a true IP solution with data transfer rates up to 100 mbps to the on board processor and can be connected directly to a network, saving companies money on both wiring and installation costs. With connectivity to Allegion Schlage, Von Duprin or ASSA ABLOY Aperio wireless locks, up to 34 doors can be controlled from a single 2700. Advanced features for wireless locks only from Sielox include Two-Man Rule and Lock Toggle. The 2700 controller can also push Allegion ONR (Over Network Reprograming) remote firmware updates of locks, gateways, PIMs saving hours and even days.

The 2700 includes 32GB of robust memory for storing redundant controller settings, cardholder data, events, logs, wiring diagrams, and manuals. This allows quick installation, rapid configuration recovery, and minimal downtime.



Ultimate in speed, serviceability, and reliability

High Performance Two Door Controller

Up to 34 doors (2 hardwired / 32 wireless)

Secure embedded Linux OS platform

One controller for any application

OSDP compatible

Expandable up to 60 Inputs / Outputs

Diagnostic and troubleshooting interface

Variable Input power 12-24 VDC +- 10% auto-sensing

12 VDC Aux Power output (1A max)

Adjustable Reader sensitivity to accommodate operation in noisy electrical environments

Reader local buzzer for held open or forced

Remotely Update Terminal Controllers

MADE IN USA

2700

Intelligent Control Panel

Maximize uptime with intelligent design

Installers and Service Technicians understand the need for serviceability when stepping foot onto a client's premises. End-users want their system up and running, period. The 2700 is designed with uptime in mind.

With a remote diagnostics port and onboard memory that saves databases, configurations, manuals and more, the 2700 minimizes downtime with information to make on-site decisions. The controller can be rebooted remotely to avoid costly service calls and the true IP connection speeds provide quicker downloads and refreshes of databases in minutes, not hours. Even the socketed relays are field replaceable.

2700 - it's the one controller that installers and service technicians want, and that end users need.

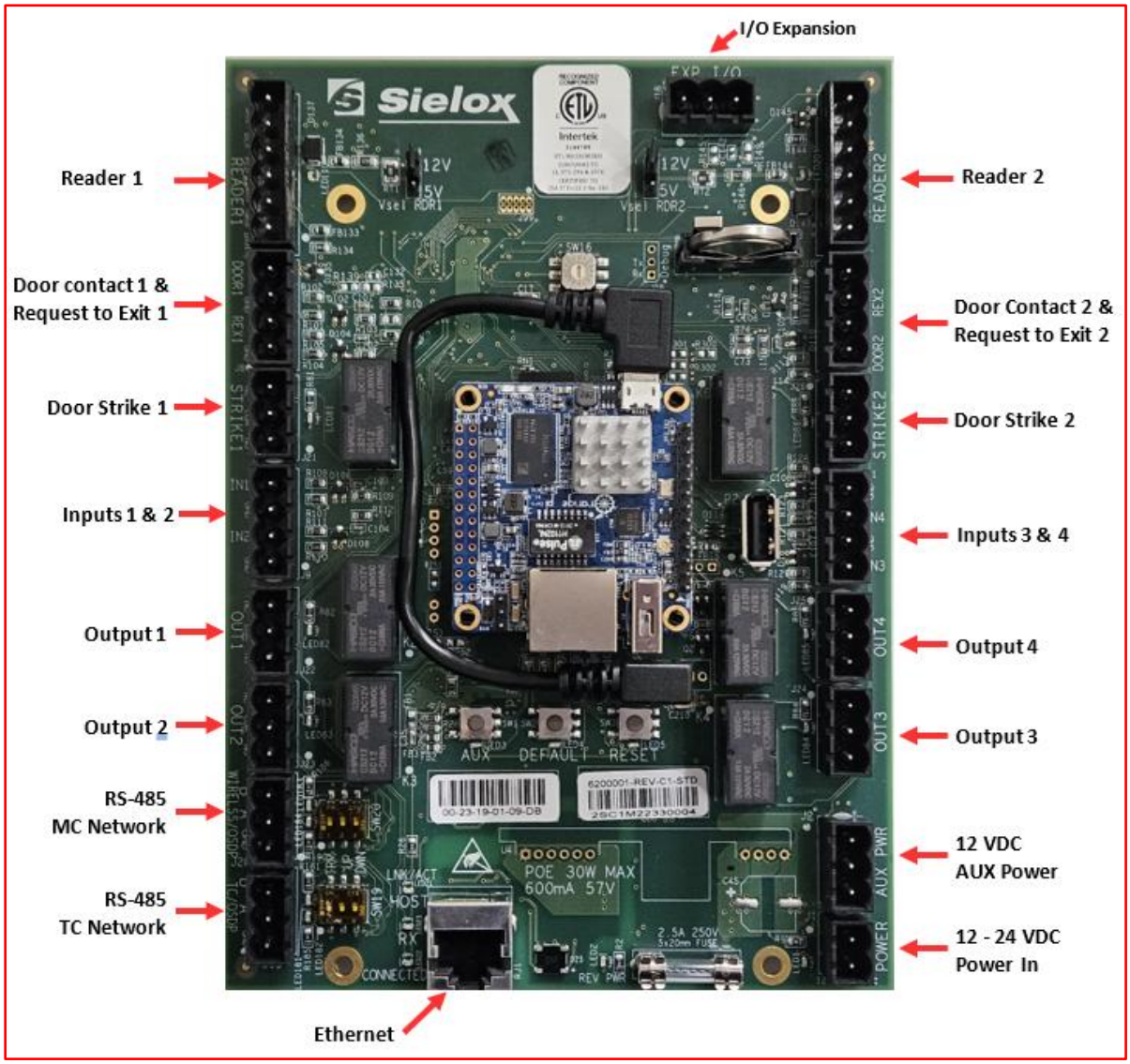



The 2700 includes 4 supervised or unsupervised inputs and 4 auxiliary outputs with field replaceable relays, expandable via daisy chain up to four 170 I/O expansion boards per 2700 controller.

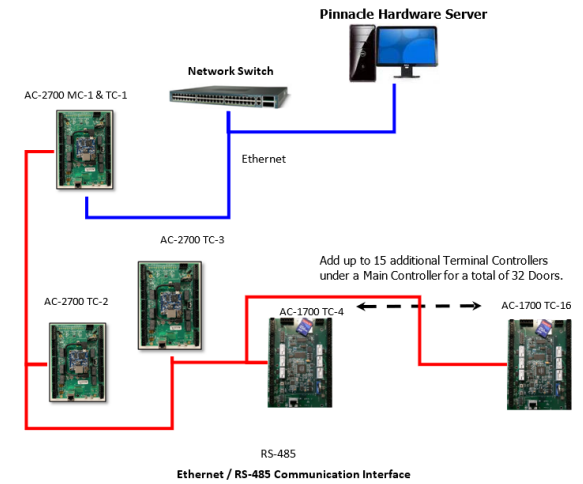

Intertek
CONFORMS TO
UL STD 294

Two Controllers in one mean fewer components to specify, install, and stock for service

Two Readers, two locks, two door position switches and two request to exit devices and 4 auxiliary inputs and 4 programmable outputs

Serviceability via onboard memory storage of manual, configuration and database

Maintenance Port for on-site or remote diagnostics and firmware updates using the onboard web based port.

Communication Ethernet with AES 256 encryption and RS-485

Downstream firmware updates for 1700 and 2700 Terminal Controllers

New firmware updates can be pushed from the Main Controller to downstream Terminal Controllers over the RS-485 connection, saving time and money

Allegion Schlage ONR Firmware updates can be pushed remotely from the Main Controller to connected Schlage devices including AD400, AD300, NDE, LE, RU/RM, PIM400-485 and Gateway 485 over the wireless lock RS-485 connection Multi-card, multi-reader

Multi-card, multi-reader

Card formats include FIPs 201, Standard 26-bit Wiegand, Sielox format, HID Corporate 1000, iClass, ANSI Wiegand, Custom Wiegand up to 40 bits, Mifare

Reader types – Supports all standard Wiegand and OSDP readers

2 to 8 Door Enclosures with 12/24v UPS battery back up

Coin Battery – Powers Real Time Clock

ETL listed component conforms to Standard UL 294

2700

Intelligent Control Panel

Product Design and Testing
2700 Controller is compatible with currently supported Sielox Pinnacle, AnyWare and CLASS software installations. Can be installed as a 2700 Main Controller with 1700 Terminal Controllers or as a 2700 Terminal Controller under a 1700 as a Main Controller. The 1700 controller cannot be upgraded to a 2700 controller. The 2700 has been tested using 1700 controller operating firmware 20.20. Legacy controllers (1500, 1200, 900, 600, 500, 300) are not compatible with 2700 as a Main or a Terminal Controller.

Product Specifications
Controller Dimensions: 7.3" x 5.2" board dimensions fit into all existing enclosures (18.5 cm x 13.2 cm)
Power Requirements: Input Voltage: 12-24VDC +/- 10%, 5 Watts. Does not include reader or auxiliary power consumption.
Operating Conditions: Temperature 0˚ to +49˚ C; Relative humidity 85% operating (non-condensing)
Certifications: FCC part 15; ETL listed component conforms to UL 294

Main Controller (MC)
Capacity: Web Maintenance Port, Maintenance Log, PDF Installation Manual, Regional Anti pass back of all 16 TCs, Regional I/O linking of all 16 TCs
Communications: Ethernet with AES 256 encryption and RS-485 for terminal controller network.

Terminal Controller (TC)
2-Door TC Modules: Support for Two Readers, two locks, two door position switches and two request to exit devices with four inputs and four outputs
Capacity: 32-bit CPU with storage for 10K buffered events; for 26-bit cards, up to 50K cards with one access level per cardholder or 25K cards with three access levels per cardholder (card type and use of PIN dependent)
Access Levels: 256 per TC
Time Zones: 64 per TC - (2 fixed as "never" and "always")
Lithium Battery: Maintains real time clock operation for more than 2 years.

Devices
Doors: Each door includes door strike output, door switch input, and request-to-exit input
Readers: Supports all standard Wiegand and OSDP readers
Inputs: User-defined inputs with up to 4 state supervision
Outputs: User-defined SPDT dry contact relays, 2A max @ 24 VDC or 24 VAC
Wireless Locks – 2700 Main Controller supports up to (32) Allegion (Schlage AD, LE or NDE) or ASSA ABLOY (Aperio) series locks

Cables
Ethernet: CAT-5 or CAT-6 (required for future POE version)
RS-485: Shielded dual twisted pair, 22 AWG (4,000 feet maximum) Belden 8723
Readers/Keypads: Shielded six conductors, 18 AWG (500 feet maximum) West Penn 3021
Inputs: Shielded twisted pair, 22 AWG (500 feet maximum) Belden 8761
Outputs: Application dependent

Sielox®
Innovative Security Management Since 1979

PEPPM®

Sielox Intelligent Layered Security Systems provide a smart way to protect people, property and assets with the highest levels of performance, reliability and cost-efficiency. Since 1979, Sielox has built its expertise working with integration prtners and end-users in all types of facilities. Our "Made in USA" lockdown solutions include the AnyWare Browser-Based Access Control Solution, CLASS Crisis Lockdown Alert Status System, 2700 Intelligent Controller and Pinnacle Advanced Access Control Software integrated with leading manufacturer wireless locks, visitor management, readers and credentials.

© 2026 Sielox LLC | www.sielox.com | 856-861-4570 | info@sielox.com | Rev. 11/26

MADE IN USA